iver

14 - 16 STEPNEY STREET STEPNEY SA 5069

Door Lever Annecy Stepped Latch/Privacy/Euro Pair H237xW50xP66mm

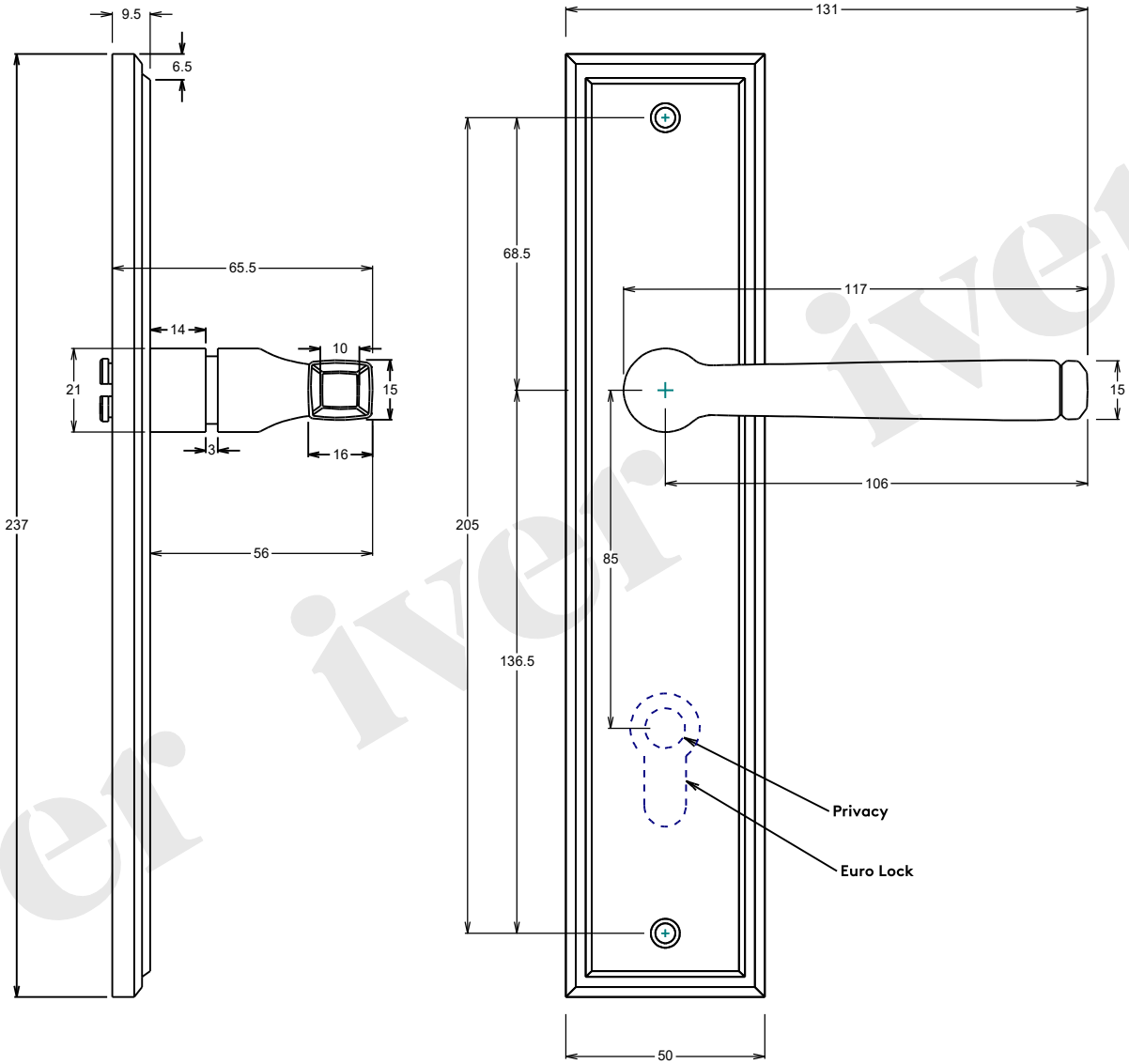

Date 30/11/2021 Revision A

Tolerance +/-1mm

iver iver iver