iver

14 - 16 STEPNEY STREET STEPNEY SA 5069

Door Lever Copenhagen Shouldered Latch/Privacy/Euro Pair H250xW48xP59mm

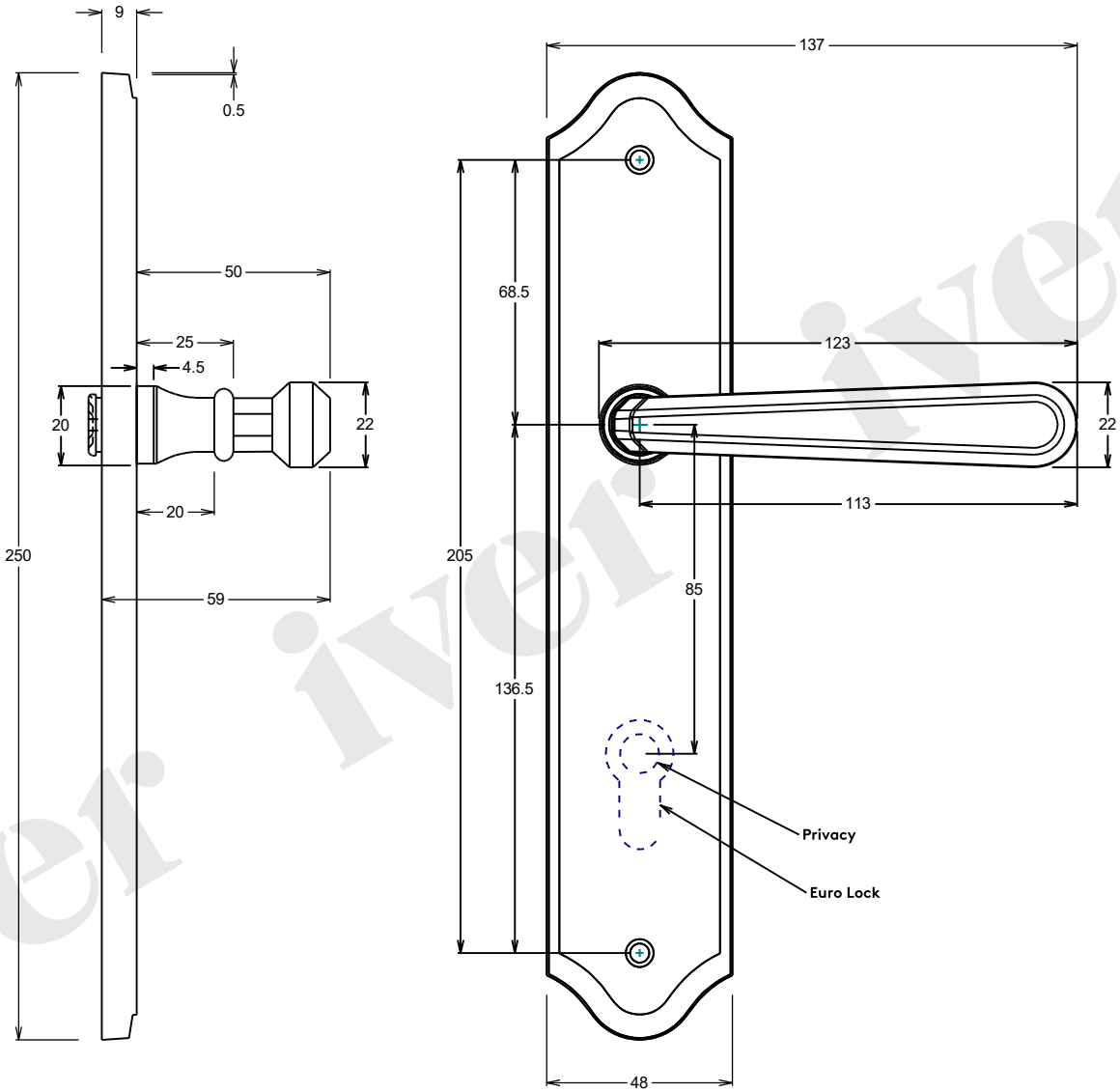

Date 25/11/2021 Revision A Tolerance +/-1mm

iver iver iver