iver

14 - 16 STEPNEY STREET STEPNEY SA 5069

Door Lever Helsinki Rectangular Latch/Privacy/Euro Pair H240xW38xP58mm

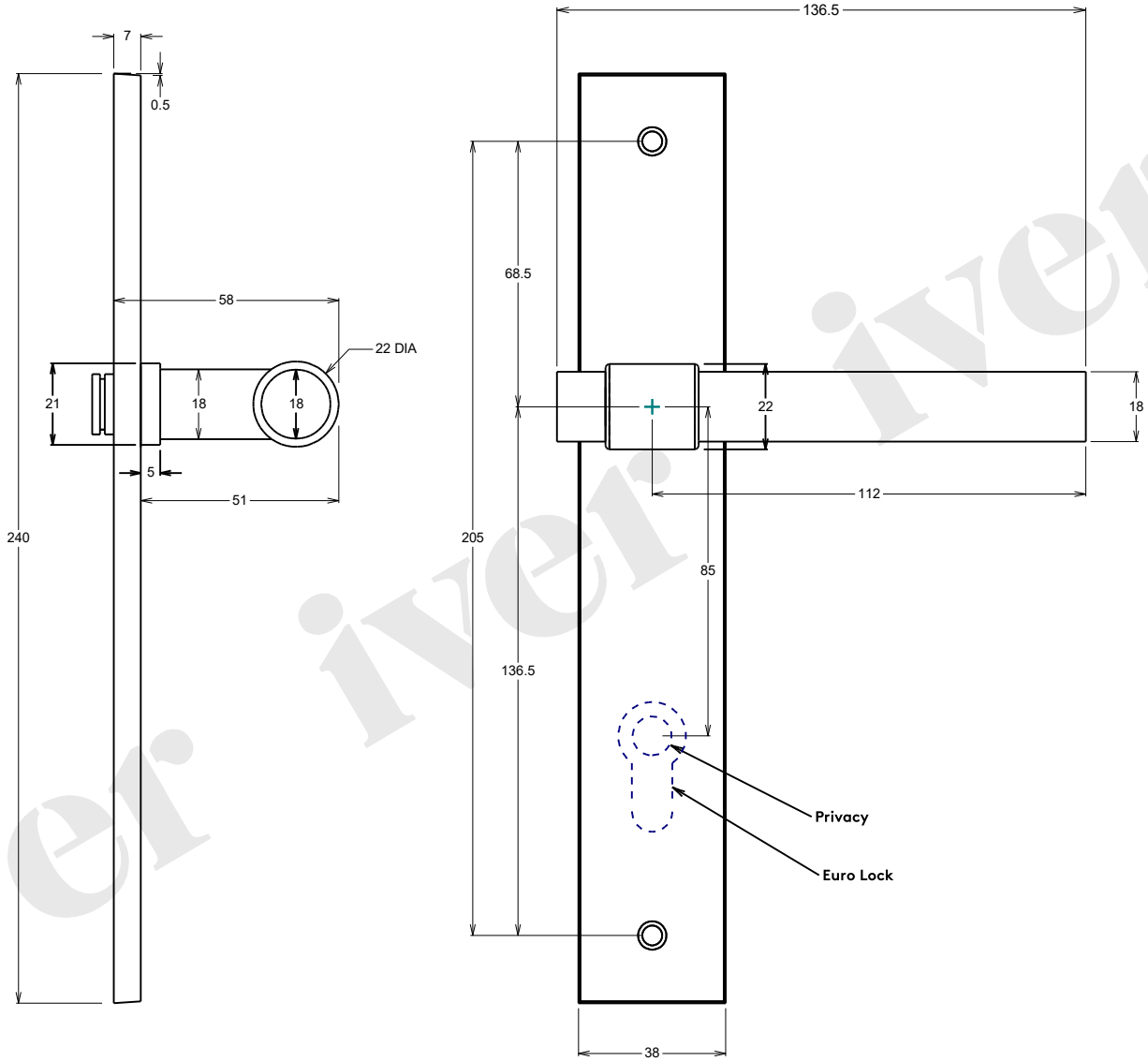

Date 22/11/2021 Revision A

Tolerance +/-1mm

iver iver iver