PIVOT DOOR CLOSER
MODEL NO. PDC-105W / 105WS

INSTALLATION INSTRUCTION

NHN Closing Solutions

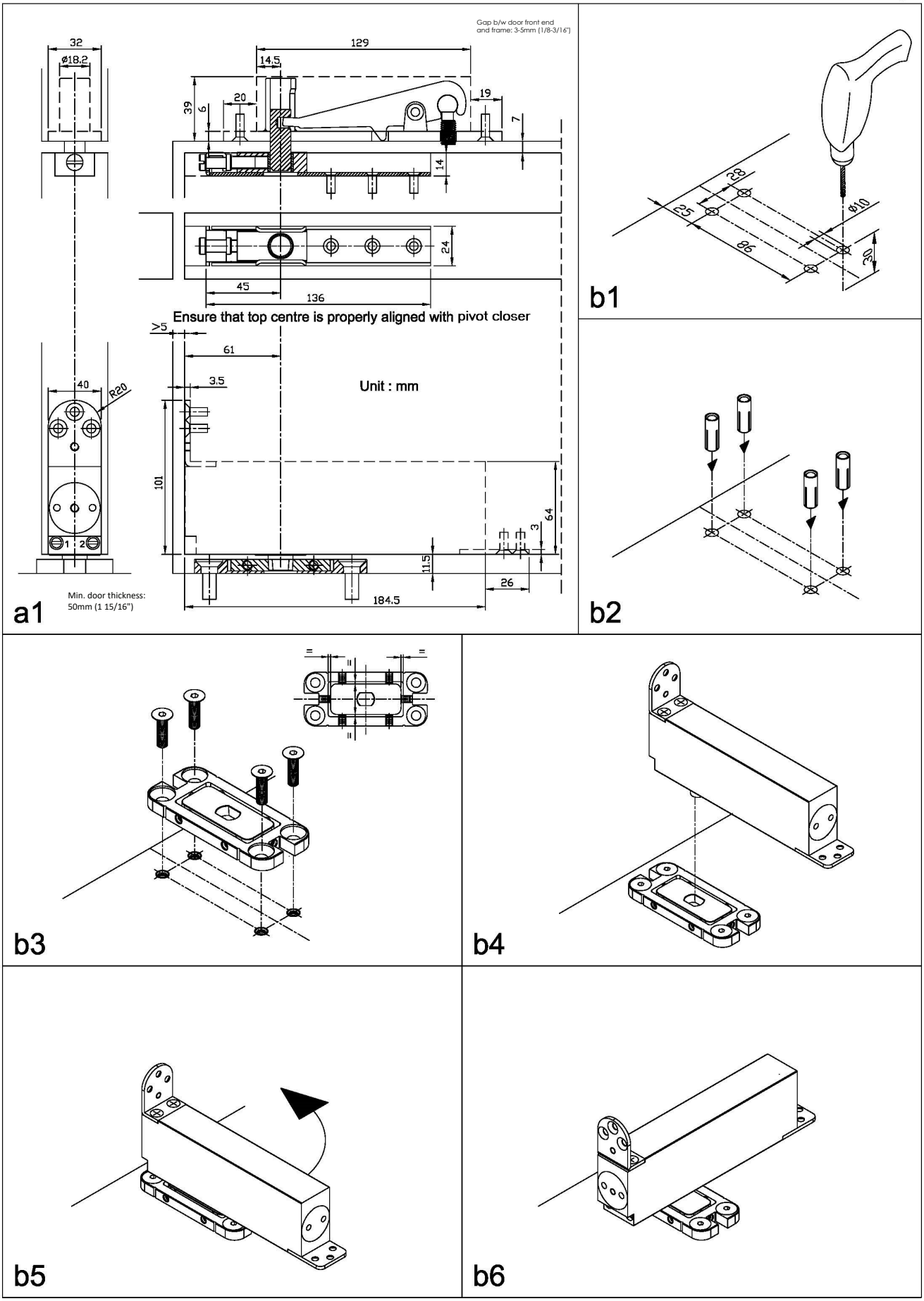

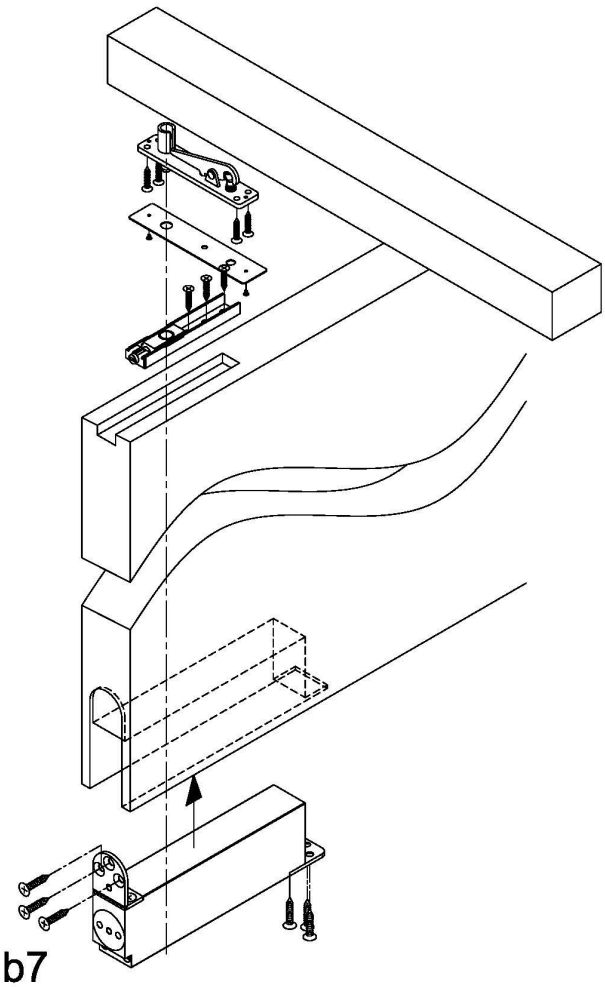

b7

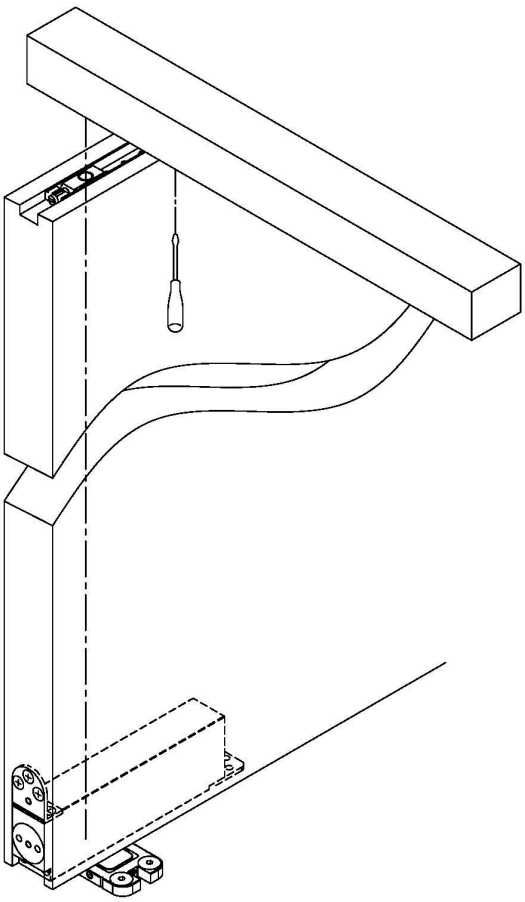

b8

Door adjustment

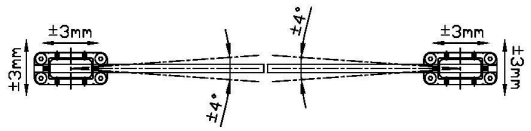

b9

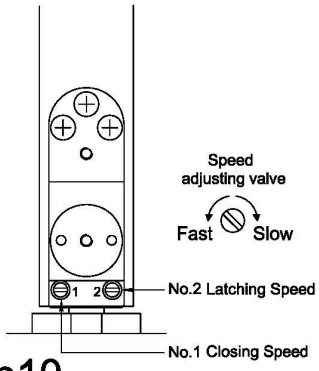

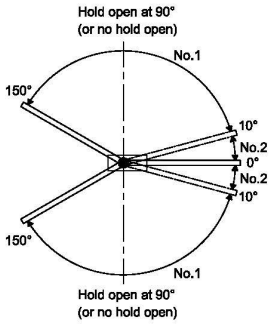

b10

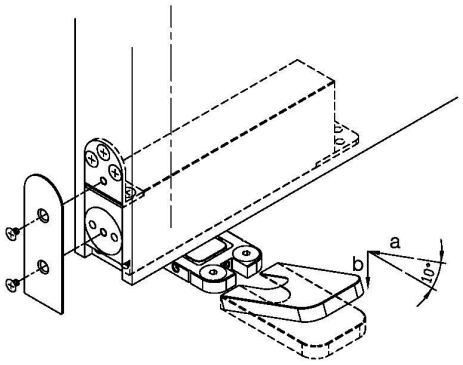

b11

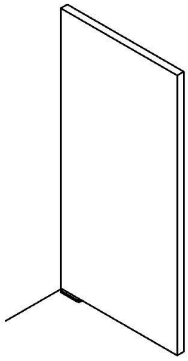

b12