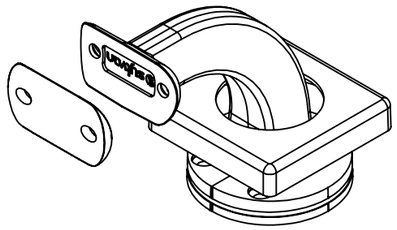

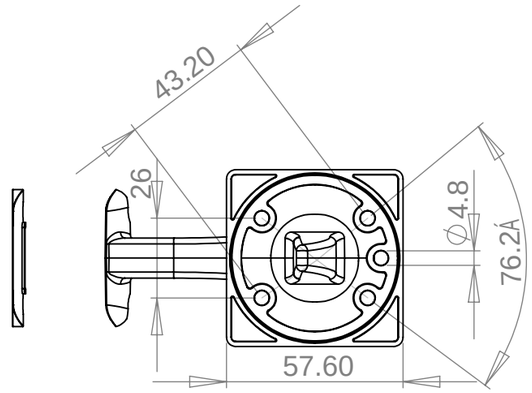

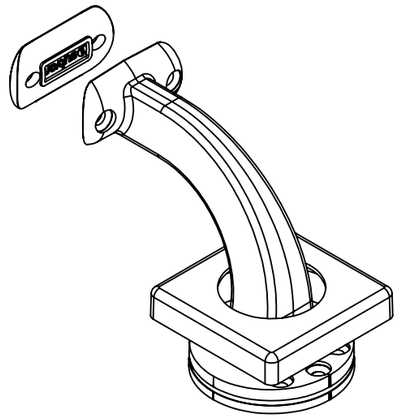

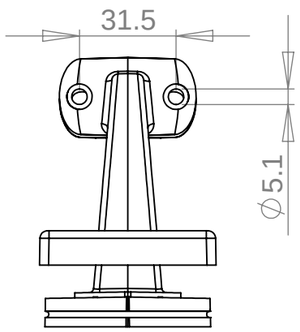

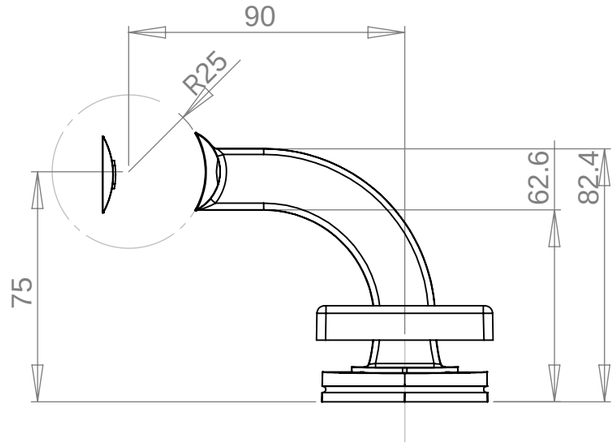

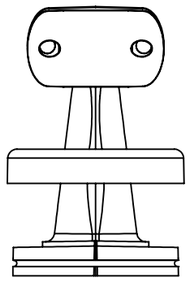

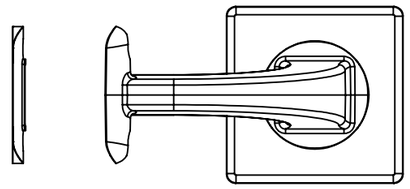

ISSUED DATE CHG NO. AUTH

SCALE 1:2

MILLIMETERS

THIRD ANGLE PROJECTION

TITLE SYLVAN BANISTER BKT

DRAWN	CHECK'D	APPRVD.	SHT 1 OF 1
PZ			
MATL. ZINC DIE CAST		FNSH SCP	
PATH		FILE NAME	

GDRutter Limited
127 Diana Drive
Glenfield
Auckland, New Zealand.
Ph +64 9 444 5359,
Fx +64 9 444 3972
Email: sales@gdrutter.co.nz
COPYRIGHT RESERVED E 2010
Plotted:

THIS INFORMATION IS HIGHLY CONFIDENTIAL AND IS THE EXCLUSIVE PROPERTY OF GDRutter LTD NZ DO NOT SCALE - IF IN DOUBT ASK DWG. SIZE A3 SAMPLES MUST BE APPROVED BEFORE QUANTITY PRODUCTION STARTS